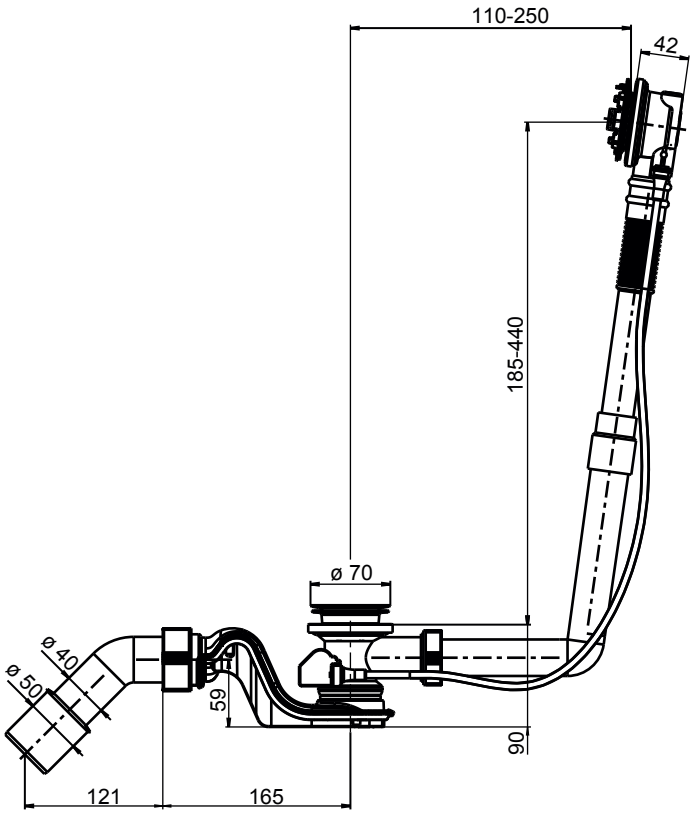
110-250
42
185-440
ø 70
ø 40
ø 50
59
90
121
165

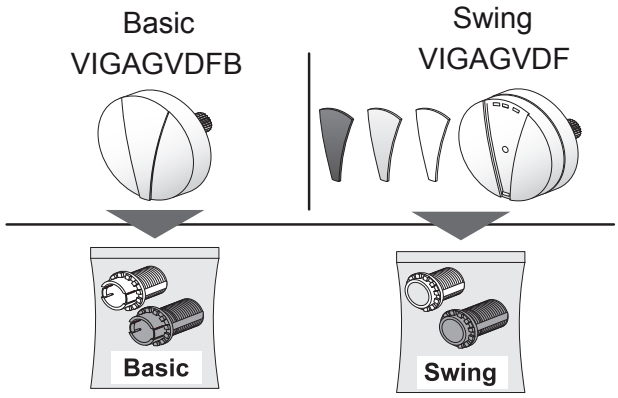
Basic
VIGAGVDFB
Swing
VIGAGVDF
Basic
Swing

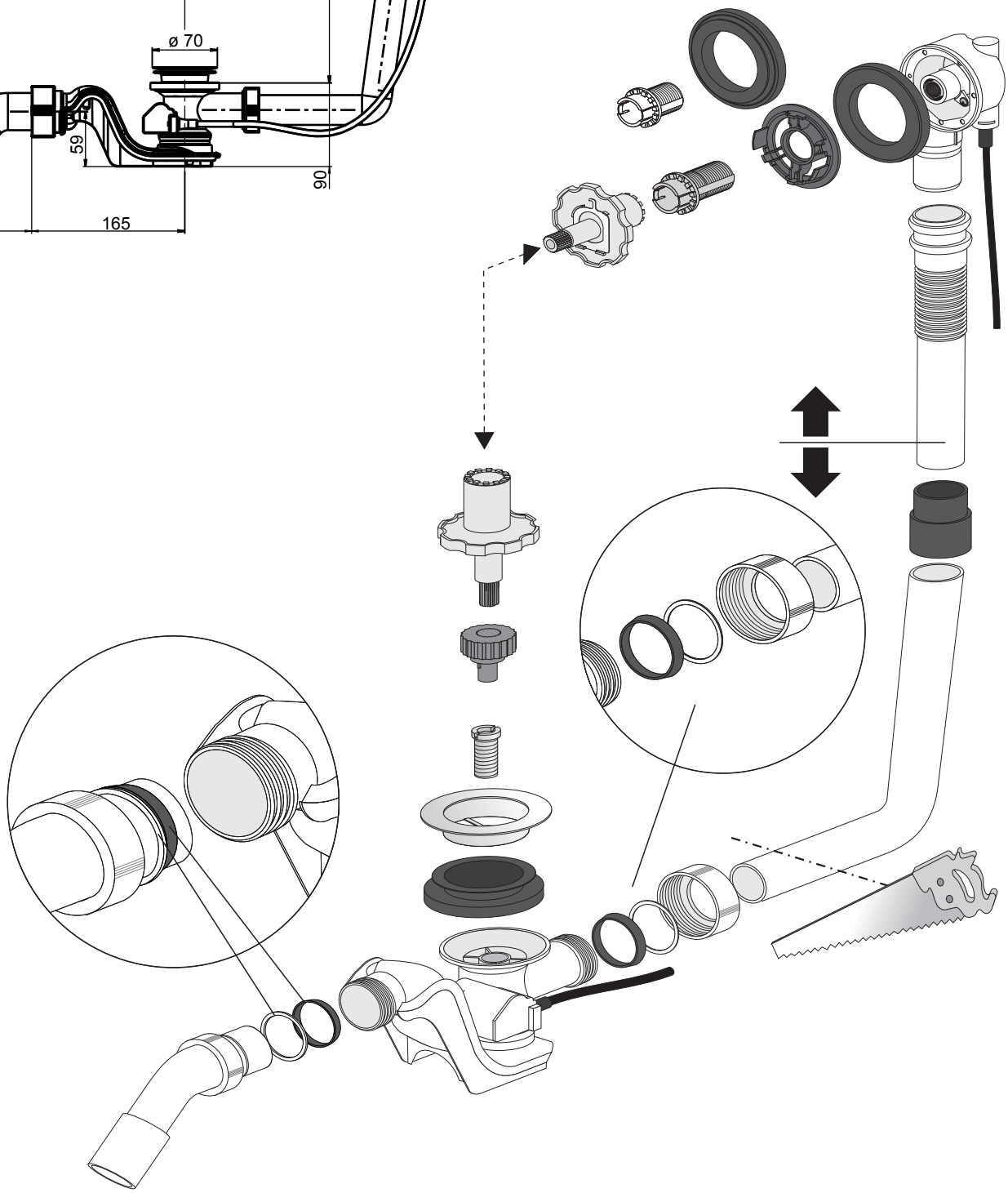

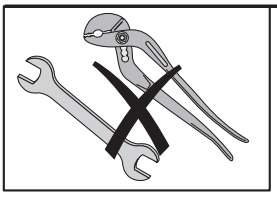

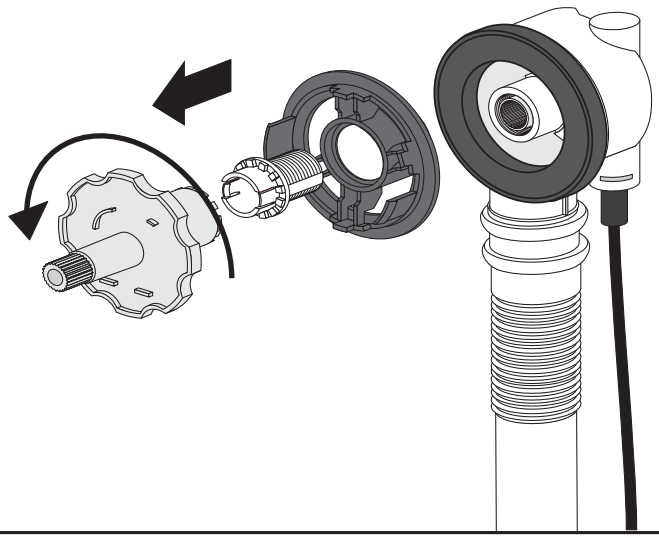

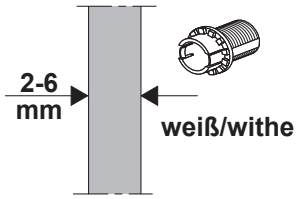
2-6
mm
weiß/withe

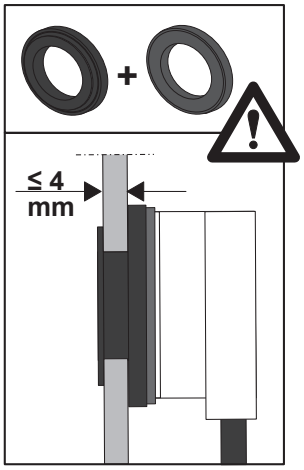
+
≤ 4
mm

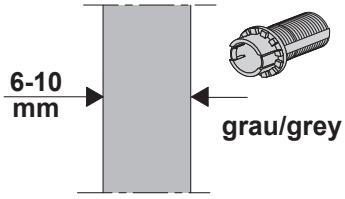
6-10
mm
grau/grey

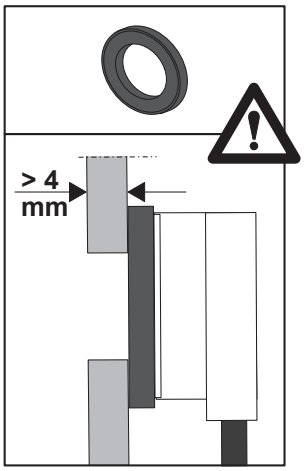
> 4
mm

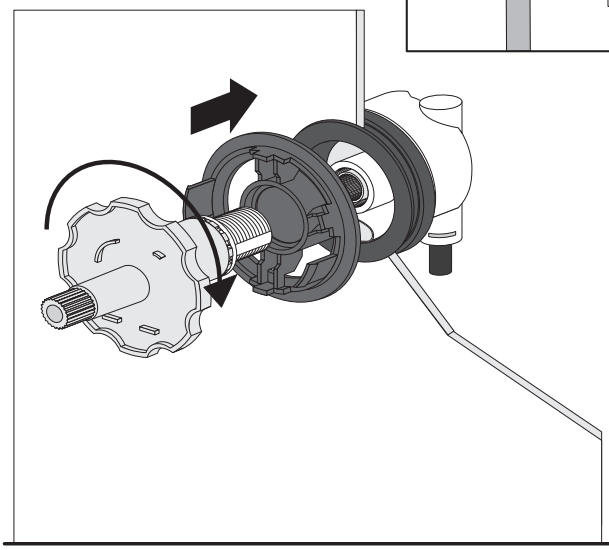

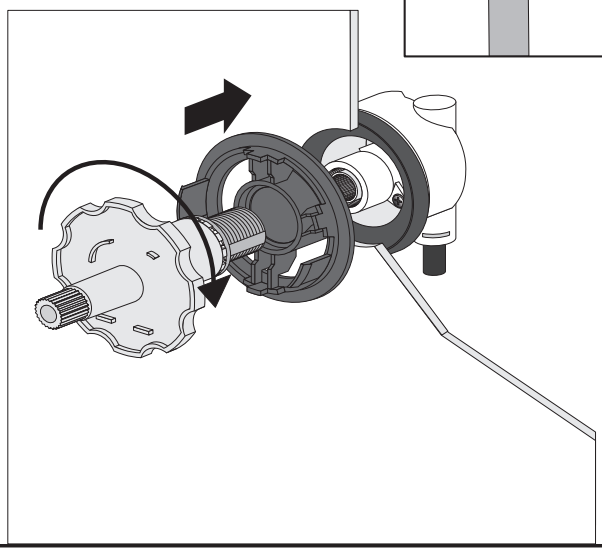

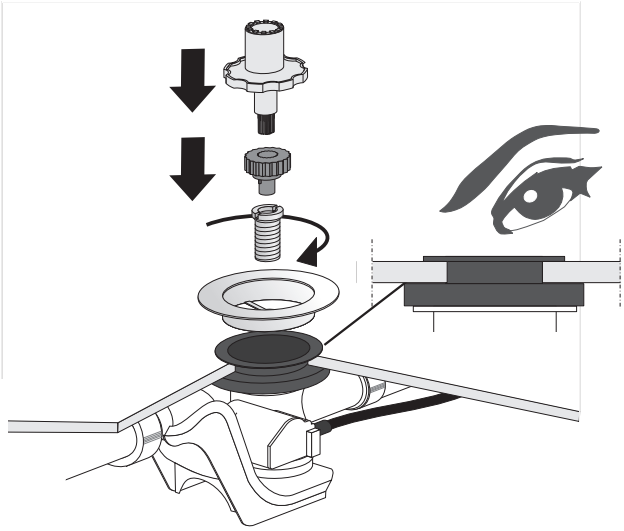

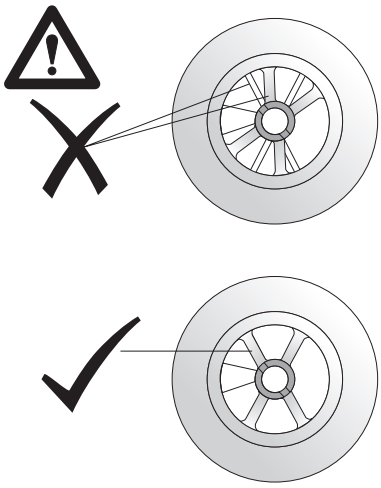

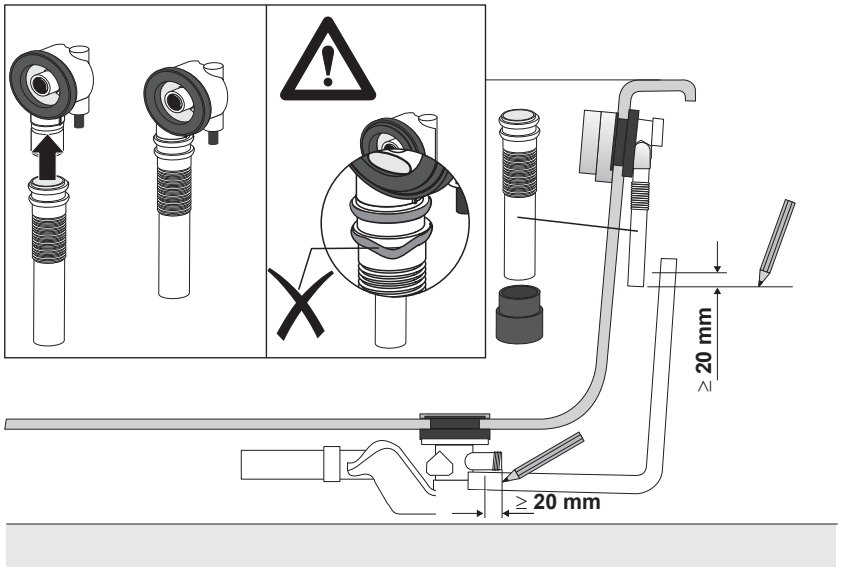
≥ 20 mm
≥ 20 mm

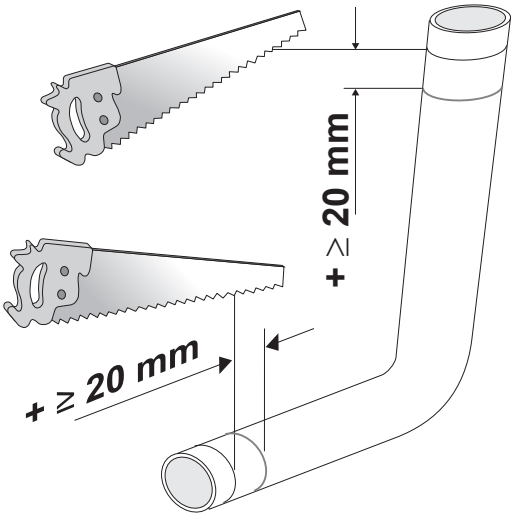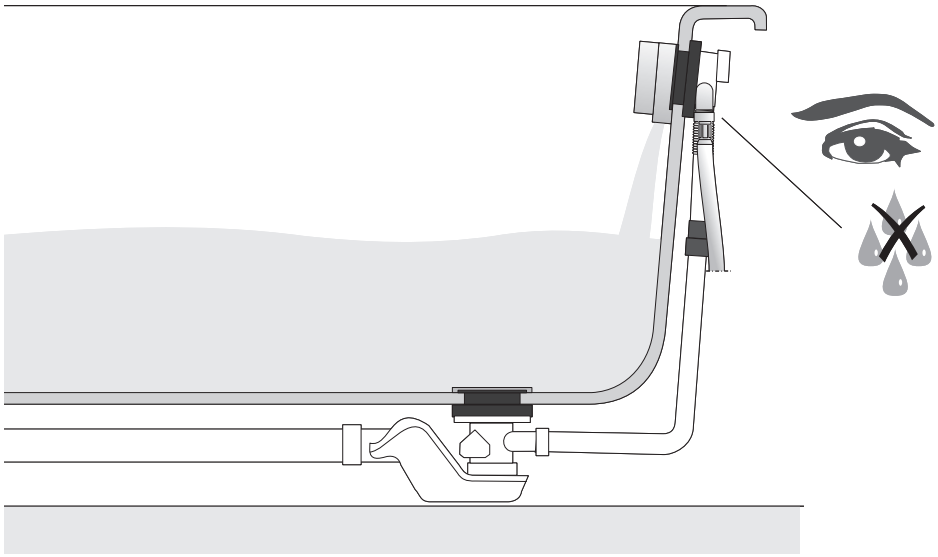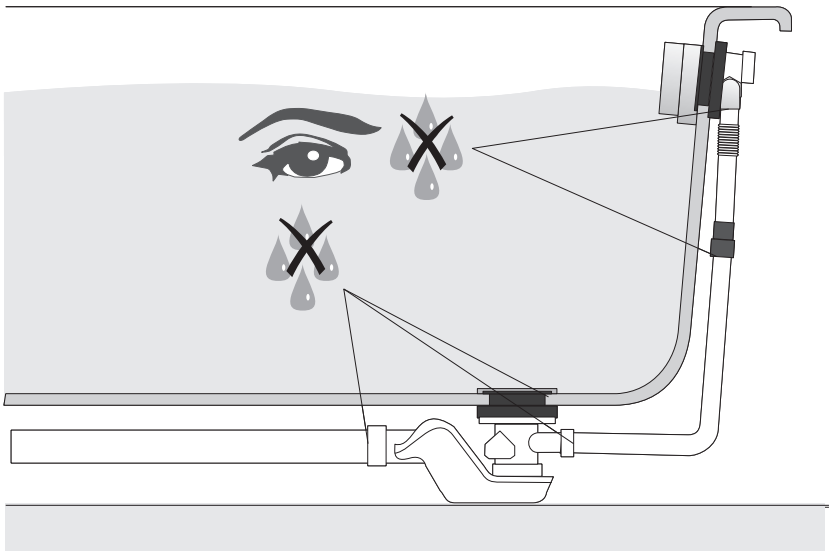
+ ≥ 20 mm
+ ≥ 20 mm